Installation, Operation, Maintenance Disassembly and Assembly Instructions for Models AL416 and AL417

June 2000 Form FVC 040 - Rev. 1

KEEP THIS DOCUMENT WITH THE PRODUCT UNTIL IT REACHES THE END USER.

WARNING

Before installation or removal of Quick Acting Valves, the system must be purged completely of all product. Use proper safety equipment at all times. An abundant supply of clean water must be readily available and easily accessible as a means of providing IMMEDIATE First Aid treatment for exposure to ANHYDROUS AMMONIA. For LP-Gas service follow NFPA / ANSI 58 Standard for the Storage and Handling of Liquefied Petroleum Gases, plus all Local and State Safety Regulations. To insure long term safe operation, the manufacturer recommends that under normal service conditions this product should be inspected at least once every five (5) years and be repaired or replaced as required. To prevent the accidental opening of any valve, never carry or grasp a valve by its handwheel or handle.

CAUTION: Contact with or inhalation of Liquid Anhydrous Ammonia or L-P Gas or their vapors can cause serious injury or death. Dispersement must be in accordance with local regulations.
For the proper handling and storage of Anhydrous Ammonia refer to ANSI Standard K61.1.
For the proper handling and storage of Liquified Petroleum Gas refer to NFPA Pamphlet 58.

TOOLS REQUIRED: Safety Equipment (i.e. gloves, goggles, and clothing), 12" Adjustable Wrench, a 3/16" diameter Drift Pin, and a small Ball Peen Hammer.

Removal of Valve for Repair or Replacement

REFER TO FIGURE 1 FOR THE FOLLOWING STEPS:

Step 1: Safety Equipment (i.e. goggles, gloves and clothing) must be worn before continuing with the next step.

Step 2: Before removing valve, place in FULL OPEN POSITION to insure all pressure is bled from the system.
NOTE: See Warning at top of page.

Disassembly Procedure for Repair

REFER TO FIGURE 1 FOR THE FOLLOWING STEPS:

Step 1: With valve secured in a bench vise, remove the 3/16" diameter Roll Pin (3), which allows the Handle Assembly (1) to be removed from the Stem and Disc Holder Assembly (2).

Step 2: Remove Bonnet (5) from Body (13).
NOTE: The Bonnet will move upward approximately 1/16" after the last thread is disengaged from the Body, allowing the Seat Spring (12) to relax to its maximum length. Remove the entire Bonnet Assembly from the Body (13).

Step 3: With the Bonnet Assembly in hand, remove the Stem and Disc Holder Assembly (2) and Seat Spring (12) from the Bonnet (5).

Step 4: Remove the Swivel Pad (4) and O-ring (6) from the top of the Bonnet (5). To remove the Seal Retainer (9), O-ring (8), and Seal Washer (9) from the Bonnet (5) place the 3/16 diameter Drift Pin thru the top hole of the Bonnet (5), and gently push against the top shoulder of the Bonnet Bushing (7).
NOTE: Take care not to let the Drift Pin scratch the Bonnet / O-ring sealing surface as the seal is removed.

Assembly Procedure

REFER TO FIGURE 2 FOR THE FOLLOWING STEPS:

Step 1: Place Stem and Disc Holder Assembly (2) on seat inside Body (13). Place Seat Spring (12) over Stem onto Disc Holder. Place Seal Washer (10) over stem and push down to rest on top of the Seat Spring (12).

Step 2: Place O-Ring (8) over Seal Retainer (9) and lubricate O-Ring with a good quality grease compatible with service conditions.

Step 3: Place O-Ring and Seal Retainer Assembly over Stem with the shoulder side of Seal Retainer (9) facing up. Install Bonnet Bushing (7) over Stem.

Step 4: Install Bonnet Gasket (11) in groove on Body (12). Install Bonnet (5) over Stem and press down firmly to engage threads on Bonnet with internal threads on Body. In order to properly install Bonnet Bushing (7), O-Ring (8), and Seal Retainer (9) into the bore of Bonnet (5), a straight downward push on Bonnet (5) is required for proper alignment. Maintaining a downward push while rotating Bonnet (5) will engage the Bonnet threads into the Body (13). Tighten the Bonnet hard against Bonnet Gasket (11).

(OVER)

Assembly Procedure (cont'd)

REFER TO FIGURE 2 FOR THE FOLLOWING STEPS:

Step 5: Place O-Ring (6) into groove on Bonnet (5) and install Swivel Pad (4) over Stem.
NOTE: Swivel Pad (4) may remain attached to the Bonnet. Lubricate the top surface of Swivel Pad (4) with a small amount of grease.

Step 6: Place Handle Assembly (1) over Stem, and replace Roll Pin (3).

Step 7: Open and Close Valve several times, then pressure test Valve for leaks at the Stem and Outlet Connections before returning to service.

Installation of New or Repaired Quick Acting

Step 1: Apply Teflon tape or sealant on male pipe threads of mating part, and place Valve in Open position.

Step 2: Install Valve and tighten to desired position taking care to not overtighten.

Operation of the Quick Acting Valve

Step 1: To open the valve, push lock latch forward and raise Handle (1) to a vertical position. When the valve is in the full open position, the heel of the handle will rest squarely on the Swivel Pad (4), and Handle (1) will be cammed over slightly past the center of the valve.

Step 2: To close the valve, tap the Handle (1) with the heel of the hand in the closing direction. The handle will rotate in a "Quick Acting" manner to the closed position. The closing spring action of the valve assembly is designed to force the Handle lock latch to lock under the Bonnet Flange (5), and therefore prevent accidental opening of the valve.

WARNING: If the valve is closed slowly by holding the handle as it is moved toward the closed position, be sure the handle continues to its stop position, to ensure that the Handle lock latch engages the Bonnet Flange (5).

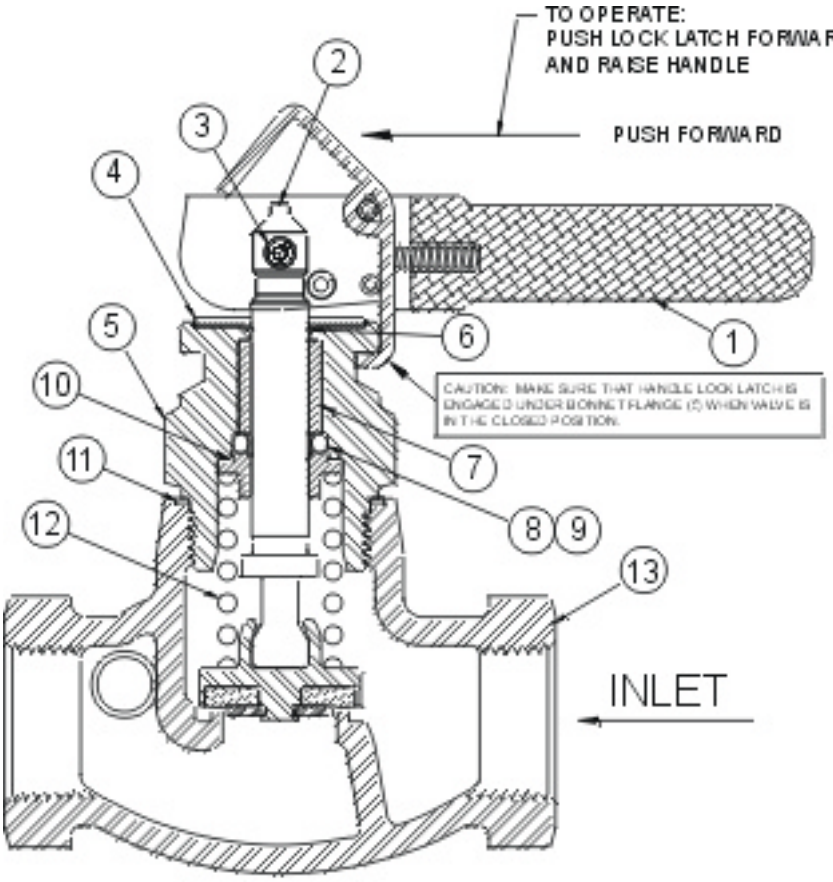

FIG. 1

* INCLUDED IN SEAL KIT #417-0022

	ITEM	DESCRIPTION	QTY
	13	Body	1
	12	Seat Spring	1
*	11	Bonnet Gasket	1
*	10	Seal Washer	1
*	9	Seal Retainer	1
*	8	O-Ring	1
*	7	Bonnet Bushing	1
*	6	O-Ring	1
	5	Bonnet	1
	4	Swivel Pad	1
*	3	Roll pin	1
*	2	Stem & Disc Holder Assy.	1
	1	Handle Assembly	1