July 1989

Incorporates Errata dated January 2001

627 Series Pressure Reducing Regulators

Introduction

Scope of Manual

This manual provides instructions for the installation, adjustment, maintenance, and parts ordering for the 627 Series regulators. These regulators usually are shipped separate for line installation, although sometimes they are shipped installed on other equipment. Refer to the instruction manual for the other equipment for installation and operating instructions.

Figure 1. Typical 627 Series Self-Operated Pressure Reducing Regulator

Description

The 627 Series self-operated pressure reducing regulators (figure 1) are for high and low pressure systems. These regulators can be used with natural gas, air, or a variety of other gases. Performance characteristics vary according to construction (see the AVAILABLE CONFIGURATIONS specification in table 1).

Specifications

Table 1 gives some general specifications for the 627 Series regulators. The nameplates (figure 2) gives detailed information for a particular regulator as it comes from the factory.

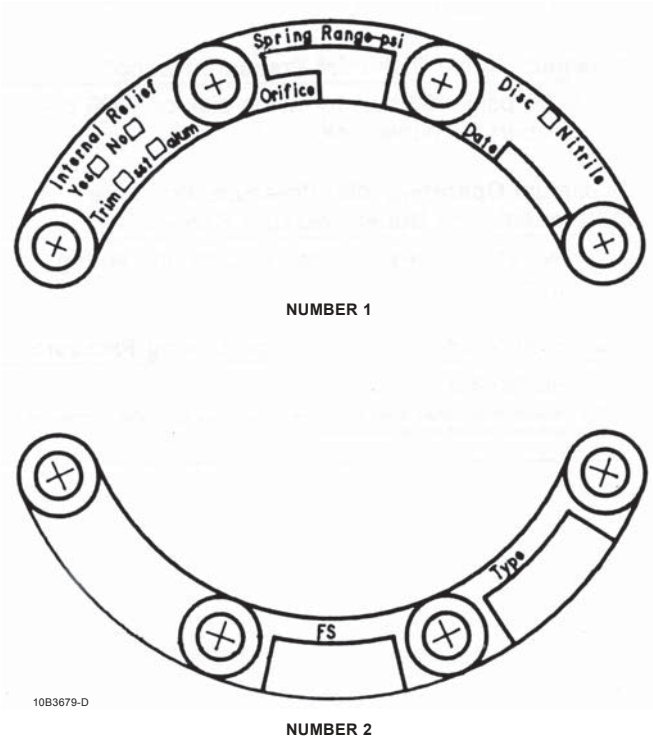

Figure 2. Nameplates

D101328X012

Table 1. Specifications

Available Constructions

Type 627: Self-operated pressure reducing regulator equipped with a pitot tube for greater regulated capacities (figure 7)

Type 627R: Type 627 with internal relief and with an open throat (figure 8)

Type 627M: Type 627 with a stem seal between the body outlet pressure and diaphragm case. Pressure is measured under the diaphragm through the 1/4-inch NPT downstream control line connection (figure 9)

Type 627MR: Type 627M with internal relief (figure 10)

Type 627H: Type 627 with a diaphragm limiter to deliver a higher outlet pressure (figure 11)

Type 627HM: Type 627H with a stem seal between the body outlet pressure and diaphragm case. Pressure is measured under the diaphragm through two 1/4-inch NPT downstream control line connections (figure 12)

Body Sizes

3/4, 1, or 2-inch

End Connection Styles

3/4, 1, or 2-inch body sizes: NPT

1 or 2-inch body sizes: ANSI Class 300 or 600 RF flanged

Maximum Inlet Pressure(1) (Body Rating)

2000 psig (138 bar) for NPT steel, 1480 psig (102 bar) for RF flanged steel, or 1000 psig (69 bar) for ductile iron

Maximum Valve Disk Inlet Pressure Rating(1)

2000 psig (138 bar) for nylon disk or 1000 psig (69 bar) for nitrile disk

Maximum Operating Inlet Pressure, Pressure Differential, and Outlet Pressure Ranges(1)

See table 2 for pressures by port and spring range

Maximum Spring and Diaphragm Casing Pressure(1)

See table 3

Maximum Body Outlet Pressure(1) (Type 627M, 627MR, and 627HM Only)

2000 psig (138 bar) for screwed steel, 1480 psig (102 bar) for RF flanged steel, or 1000 psig (69 bar) for ductile iron. (Type 627 and 627R are limited by maximum diaphragm casing pressure)

Port Diameters

See table 2

Internal Relief Performance

Type 627R: See table 4

Type 627MR: Limited by field-installed control line piping

Temperature Capabilities(1)

-20 to 180°F (-29 to 82°C)

Pressure Registration

Type 627, 627H or 627R: Internal

Type 627M, 627HM or 627MR: External through 1/4-inch NPT control line connection in the diaphragm casing

De-Icer System

See figure 3 and Type 627M Regulator De-Icer System Application section

Relief Indicator

For 627R and 627MR (see figures 8 and 9)

Spring Case Vent Connection

3/4-inch NPT female with removable screened vent assembly

Control Line Connection (Type 627M, 627HM or 627MR Only)

1/4-inch NPT female

Approximate Weight

Ductile Iron or Steel Casings: 10 pounds (4,5 kg)

Aluminum Casings: 6.3 pounds (2.8 kg)

1. The pressure/temperature limits in this instruction manual or any applicable standard limitation should not be exceeded.

Table 2. Maximum Inlet Pressures, Differential Pressures, and Outlet Pressure Ranges

TYPE NUMBER	OUTLET PRESSURE RANGE, SPRING PART NUMBER, AND COLOR	ORIFICE SIZE, INCHES (mm)	MAXIMUM INLET PRESSURE, PSIG (bar)	MAXIMUM DIFFERENTIAL PRESSURE, PSID (bar)
627 and 627M[3]	5[2] to 20 psig (0,34 to 1,4 bar) 10B3076X012 Yellow	3/32 (2,4) 1/8 (3,2) 3/16 (4,8) 1/4 (6,4) 3/8 (9,5) 1/2 (12,7)	2000 (138)[1] 1000 (69)[1] 750 (51,7) 500 (34,5) 300 (20,7) 250 (17,2)	2000 (138)[1] 1000 (69)[1] 750 (51,7) 500 (34,5) 300 (20,7) 250 (17,2)
	15 to 40 psig (1,0 to 2,8 bar) 10B3077X012 Green	3/32 (2,4) 1/8 (3,2) 3/16 (4,8) 1/4 (6,4) 3/8 (9,5) 1/2 (12,7)	2000 (138)[1] 1500 (103)[1] 1000 (69)[1] 750 (51,7) 500 (34,5) 300 (20,7)	2000 (138)[1] 1500 (103)[1] 1000 (69)[1] 750 (51,7) 500 (34,5) 300 (20,7)
	35 to 80 psig (2,4 to 5,5 bar) 10B3078X012 Blue	3/32 (2,4) 1/8 (3,2) 3/16 (4,8) 1/4 (6,4) 3/8 (9,5) 1/2 (12,7)	2000 (138)[1] 2000 (138)[1] 1750 (121)[1] 1500 (103)[1] 1000 (69)[1] 750 (51,7)	2000 (138)[1] 2000 (138)[1] 1750 (121)[1] 1500 (103)[1] 1000 (69)[1] 750 (51,7)
	70 to 150 psig (4,8 to 10,3 bar) 10B3079X012 Red	3/32 (2,4) 1/8 (3,2) 3/16 (4,8) 1/4 (6,4) 3/8 (9,5) 1/2 (12,7)	2000 (138)[1] 2000 (138)[1] 2000 (138)[1] 1750 (121)[1] 1250 (86,2)[1] 750 (51,7)	2000 (138)[1] 2000 (138)[1] 2000 (138)[1] 1750 (121)[1] 1250 (86,2)[1] 750 (51,7)
627R and 627MR	5[2] to 20 psig (0,34 to 1,4 bar) 10B3076X012 Yellow	3/32 (2,4) 1/8 (3,2) 3/16 (4,8) 1/4 (6,4) 3/8 (9,5) 1/2 (12,7)	2000 (138)[1] 1000 (69)[1] 750 (51,7) 500 (34,5) 300 (20,7) 200 (13,8)	2000 (138)[1] 1000 (69)[1] 750 (51,7) 500 (34,5) 300 (20,7) 200 (13,8)
	15 to 40 psig (1,0 to 2,8 bar) 10B3077X012 Green	3/32 (2,4) 1/8 (3,2) 3/16 (4,8) 1/4 (6,4) 3/8 (9,5) 1/2 (12,7)	2000 (138)[1] 1500 (103)[1] 1000 (69)[1] 750 (51,7) 300 (20,7) 200 (13,8)	2000 (138)[1] 1500 (103)[1] 1000 (69)[1] 750 (51,7) 300 (20,7) 200 (13,8)
	35 to 80 psig (2,4 to 5,5 bar) 10B3078X012 Blue	3/32 (2,4) 1/8 (3,2) 3/16 (4,8) 1/4 (6,4) 3/8 (9,5) 1/2 (12,7)	2000 (138)[1] 1750 (121)[1] 1000 (69)[1] 750 (51,7) 300 (20,7) 200 (13,8)	2000 (138)[1] 1750 (121)[1] 1000 (69)[1] 750 (51,7) 300 (20,7) 200 (13,8)
	70 to 150 psig (4,8 to 10,3 bar) 10B3079X012 Red	3/32 (2,4) 1/8 (3,2) 3/16 (4,8) 1/4 (6,4) 3/8 (9,5) 1/2 (12,7)	2000 (138)[1] 1000 (69)[1] 500 (34,5) 300 (20,7) 200 (13,8) 200 (13,8)	2000 (138)[1] 1000 (69)[1] 500 (34,5) 300 (20,7) 200 (13,8) 200 (13,8)
627H and 627MH[3]	140 to 250 psig (9,7 to 17,2 bar) 10B3078X012 Blue	3/32 (2,4) 1/8 (3,2) 3/16 (4,8) 1/4 (6,4) 3/8 (9,5) 1/2 (12,7)	2000 (138)[1] 2000 (138)[1] 1750 (121)[1] 1500 (103)[1] 1000 (69)[1] 750 (51,7)	2000 (138)[1] 2000 (138)[1] 1750 (121)[1] 1000 (69)[1] 500 (34,5) 250 (17,2)
	240 to 500 psig (16,5 to 34,5 bar) 10B3079X012 Red	3/32 (2,4) 1/8 (3,2) 3/16 (4,8) 1/4 (6,4) 3/8 (9,5) 1/2 (12,7)	2000 (138)[1] 2000 (138)[1] 1750 (121)[1] 1500 (103)[1] 1000 (69)[1] 750 (51,7)	2000 (138)[1] 2000 (138)[1] 1750 (121)[1] 1000 (69)[1] 500 (34,5) 250 (17,2)

1. For inlet pressure in excess of 1000 psig (69 bar), refer to the maximum body and disk pressure ratings in the specification table.
2. For pressure settings under 10 psig (0,69 bar), inlet pressure should be limited to approximately 100 psig (6,9 bar) so the setpoint adjustment can be obtained.
3. The unbalance forces change from the wide-open monitor mode to an active regulator mode such that the Type 627M or 627MH should have a 3/8-inch (9,5 mm) or larger orifice when used as a wide-open monitor.

Table 3. Maximum Spring and Diaphragm Casing Pressure(1)

MAXIMUM PRESSURE DESCRIPTION	SPRING AND DIAPHRAGM CASING STYLE	TYPE 627, PSIG (bar)	TYPE 627R, PSIG (bar)	TYPE 627M, PSIG (bar)	TYPE 627MR, PSIG (bar)	TYPE 627H AND 627HM, PSIG (bar)
Maximum pressure to spring and diaphragm casings to prevent leak to atmosphere other than relief action (internal parts damage may occur)	Die cast aluminum	250 (17,2)	250 (17,2)	Not Available	Not Available	Not Available
	Die cast aluminum	250 (17,2)	250 (17,2)	250 (17,2)	Not Available	Not Available
	Steel	250 (17,2)	250 (17,2)	250 (17,2)	250 (17,2)	800 (55,2)
Maximum pressure to spring and diaphragm casings to prevent burst of casings during abnormal operation (leak to atmosphere and internal parts damage may occur)	Die cast aluminum	375 (25,9)	375 (25,9)	Not Available	Not Available	Not Available
	Ductile iron	465 (32)	465 (32)	465 (32)	465 (32)	Not Available
	Steel	1500 (103)	1500 (103)	1500 (103)	1500 (103)	1500 (103)
Maximum diaphragm casing overpressure (above setpoint) to prevent damage to internal parts	All styles	60 (4,1)	120 (8,3)	60 (4,1)	120 (8,3)	120 (8,3)

1. If the spring case is pressurized, a metal adjusting screw cap is required. Contact your Fisher Sales Representative.

WARNING

Personal injury, property damage, equipment damage, or leakage due to escaping gas or bursting of pressure-containing parts may result if this regulator is overpressured or is installed where service conditions could exceed the limits given in tables 1, 2, 3, and 4, or where conditions exceed any ratings of the adjacent piping or piping connections.

To avoid such injury or damage, provide pressure-relieving or pressure-limiting devices (as required by the appropriate code, regulation, or standard) to prevent service conditions from exceeding those limits. The Type 627R or 627MR regulator with internal relief will provide downstream overpressure protection within the limits given in tables 1, 2, 3 and 4. If these limits are exceeded additional downstream overpressure protection must be provided by the user.

Additionally, physical damage to the regulator could cause personal injury or property damage due to escaping gas. To avoid such injury or damage, install the regulator in a safe location.

Installation

Regulator operation within ratings does not preclude the possibility of damage from debris in the lines or from external sources. A regulator should be inspected for damage periodically and after any overpressure condition. Key numbers referenced in this section are shown in figures 7 through 12. Ensure that the operating temperature capabilities listed in table 1 are not exceeded.

Like most regulators, 627 Series regulators have outlet pressure ratings that are lower than their inlet pressure ratings. A pressure relieving or pressure limiting device must be provided by the user for the Type 627, 627H, 627M, and 627HM regulators if the inlet pressure can exceed the outlet pressure rating, since these regulators do not have internal relief.

Type 627R regulators provide internal relief which limits the total outlet pressure buildup over setpoint. Use table 4 to determine the total outlet pressure. This internal relief may be adequate for the application, if not, provide additional pressure relief or a pressure limiting device downstream.

Note

If the regulator is shipped mounted on another unit, install that unit according to the appropriate instruction manual.

Perform steps 1 through 6 for all types of regulators:

1. Only personnel qualified through training and experience should install, operate, or maintain this regulator.

2. For a regulator that is shipped separately, make sure that there is no damage to, or foreign material in, the regulator.

3. Ensure that all tubing and piping have been blown free of foreign debris.

4. The regulator may be installed in any position as long as the flow through the body is in the direction indicated by the arrow cast on the body.

5. If continuous operation is required during inspection or maintenance, install a three-valve bypass around the regulator.

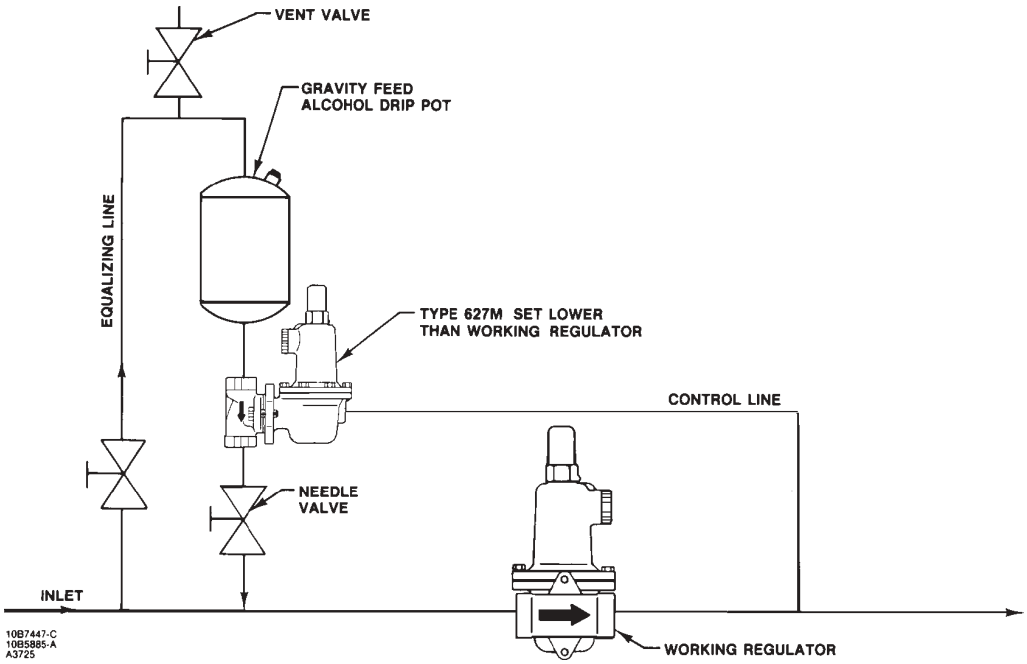

Figure 3. Schematic of De-Icer System

WARNING

A regulator may vent some gas to the atmosphere. In hazardous or flammable gas service, vented gasmay accumulate and cause personal injury, death, or property damage due to fire or explosion. Vent a regulator in hazardousgas service toa remote, safe location away from air intakes or any hazardous area. The vent line or stack opening must be protected against condensation or clogging.

6. Position the body (key 1) and/or diaphragmspring case (key 29) so it will not collectmoisture or debris into the screened vent. If the regulator requires repositioning, refer to the body area maintenance procedures and/or the diaphragm case area maintenance procedures in the Maintenance section to reposition the screened vent for the application.

Perform steps 7 through 9 for Types 627M, 627HM, and 627MR regulators only:

7. A Type 627M, 627HM, or 627MR regulator requires a downstream control line. Install the control line before putting the regulator into operation.

8. Ensure that the downstream control line piping is at least 3/8-inch or larger outside diameter tubing and connected to a straight section of outlet piping 10 diameters downstream of the regulator.

9. A hand valve should be installed in the control line. This hand valve can be used to throttle down and dampen outlet pulsations in control pressure which may cause unstability or cycling of the regulator.

Remote Vent Line Installation

All 627 series regulators have a vent assembly installed in the 3/4-inch NPT spring case vent opening. The vent assembly can be removed to install a remote vent line if necessary. Remote vent lines must have the largest practical diameter. The vent line should be as short as possible with a minimum number of bends or elbows.

Protect the remote vent opening against entrance of rain, snow, or any other foreign material that may plug the vent or vent line and prevent proper operation of the regulator. Periodically check the vent opening to be sure it is not plugged with foreign debris.

Type 627M or 627HM Regulator De-Icer System Application

For the Type 627M or 627HM regulator de-icer system, refer to the application shown in figure 3. With a large pressure drop across the working regulator, ice can

Table 4. Type 627R Internal Relief Performance[1]

OUTLET PRESSURE RANGE, SPRING PART NUMBER, AND COLOR	OUTLET PRESSURE SETTING, PSIG (bar)	MAXIMUM ALLOWABLE DOWNSTREAM SYSTEM PRESSURE, PSIG (bar)	MAXIMUM INLET PRESSURE TO KEEP MAXIMUM ALLOWABLE DOWNSTREAM SYSTEM PRESSURE FROM BEING EXCEEDED, PSIG (bar)[2]					
			Orifice Size, Inches (mm)					
			3/32 (2,4)	1/8 (3,2)	3/16 (4,8)	1/4 (6,4)	3/8 (9,5)	1/2 (12,7)
5[3] to 20 psig (0,34 to 1,4 bar) 10B3076X012 Yellow	10 (0,69)	60 (4,1)	1250 (86,2)	740 (51,1)	320 (22,1)	190 (13,1)	95 (6,56)	75 (5,18)
		100 (6,9)	2000 (138)	1500 (103)	620 (42,7)	390 (26,9)	180 (12,4)	130 (8,97)
		125 (8,6)	2000 (138)	1900 (131)	830 (57,2)	480 (33,1)	220 (15,2)	160 (11,0)
		175 (12,1)	2000 (138)	2000 (138)	1100 (75,8)	670 (46,2)	320 (22,1)	220 (15,2)
		200 (13,8)	2000 (138)	2000 (138)	1300 (89,6)	770 (53,1)	360 (24,8)	260 (17,9)
		250 (17,2)	2000 (138)	2000 (138)	1600 (110)	960 (66,2)	450 (31,0)	320 (22,1)
	15 (1,0)	60 (4,1)	1000 (69,0)	620 (42,7)	260 (17,9)	170 (11,7)	90 (6,2)	70 (4,8)
		100 (6,9)	2000 (138)	1400 (96,5)	610 (42,1)	370 (25,5)	170 (11,7)	130 (8,97)
		125 (8,6)	2000 (138)	1900 (131)	810 (55,8)	480 (33,1)	220 (15,2)	160 (11,0)
		175 (12,1)	2000 (138)	2000 (138)	1100 (75,8)	670 (46,2)	320 (22,1)	220 (15,2)
		200 (13,8)	2000 (138)	2000 (138)	1300 (89,6)	770 (53,1)	360 (24,8)	260 (17,9)
		250 (17,2)	2000 (138)	2000 (138)	1600 (110)	960 (66,2)	450 (31,0)	320 (22,1)
	20 (1,4)	60 (4,1)	850 (58,6)	490 (33,8)	210 (14,5)	130 (9,0)	80 (5,52)	65 (4,49)
		100 (6,9)	2000 (138)	1300 (89,6)	600 (41,4)	360 (24,8)	170 (11,7)	120 (8,28)
		125 (8,6)	2000 (138)	1800 (124)	800 (55,2)	480 (33,1)	220 (15,2)	160 (11,0)
		175 (12,1)	2000 (138)	2000 (138)	1100 (75,8)	670 (46,2)	320 (22,1)	220 (15,2)
		200 (13,8)	2000 (138)	2000 (138)	1300 (89,6)	770 (53,1)	360 (24,8)	260 (17,9)
		250 (17,2)	2000 (138)	2000 (138)	1600 (110)	960 (66,2)	450 (31,0)	320 (22,1)
15 to 40 psig (1,0 to 2,8 bar) 10B3077X012 Green	15 (1,0)	60 (4,1)	1000 (69,0)	380 (26,2)	210 (14,5)	130 (8,97)	80 (5,5)	65 (4,49)
		100 (6,9)	2000 (138)	1300 (89,6)	590 (40,7)	350 (24,1)	170 (11,7)	120 (8,28)
		125 (8,6)	2000 (138)	1800 (124)	800 (55,2)	470 (32,4)	220 (15,2)	160 (11,0)
		175 (12,1)	2000 (138)	2000 (138)	1100 (75,8)	640 (44,1)	320 (22,1)	220 (15,2)
		200 (13,8)	2000 (138)	2000 (138)	1300 (89,6)	780 (53,8)	370 (25,5)	260 (17,9)
		250 (17,2)	2000 (138)	2000 (138)	1600 (66,2)	960 (66,2)	450 (31,0)	320 (22,1)
	20 (1,4)	60 (4,1)	630 (43,4)	200 (13,8)	150 (10,3)	100 (6,9)	70 (4,83)	65 (4,49)
		100 (6,9)	2000 (138)	1200 (82,7)	550 (37,9)	330 (22,8)	160 (11,0)	120 (8,28)
		125 (8,6)	2000 (138)	1700 (117)	760 (52,4)	450 (31,1)	210 (14,5)	160 (11,0)
		175 (12,1)	2000 (138)	2000 (138)	1100 (75,8)	630 (43,4)	320 (22,1)	220 (15,2)
		200 (13,8)	2000 (138)	2000 (138)	1300 (89,6)	770 (53,1)	360 (24,8)	260 (17,9)
		250 (17,2)	2000 (138)	2000 (138)	1600 (66,2)	960 (66,2)	460 (31,7)	320 (22,1)
	30 (2,1)	100 (6,9)	2000 (138)	950 (65,5)	450 (31,1)	260 (17,9)	140 (9,66)	110 (7,59)
		125 (8,6)	2000 (138)	1500 (103)	670 (46,2)	400 (27,6)	190 (13,1)	150 (10,3)
		175 (12,1)	2000 (138)	2000 (138)	1000 (69,0)	610 (42,1)	300 (20,7)	220 (15,2)
		200 (13,8)	2000 (138)	2000 (138)	1200 (82,7)	760 (52,4)	360 (24,8)	260 (17,9)
		250 (17,2)	2000 (138)	2000 (138)	1600 (110)	970 (66,9)	460 (31,7)	320 (22,1)
	40 (2,8)	100 (6,9)	1500 (103)	700 (48,3)	330 (22,8)	200 (13,8)	120 (8,28)	108 (7,45)
		125 (8,6)	2000 (138)	1300 (89,6)	560 (38,6)	340 (23,4)	180 (12,4)	140 (9,66)
		175 (12,1)	2000 (138)	1800 (124)	1000 (69,0)	550 (37,9)	290 (20,0)	220 (15,2)
		200 (13,8)	2000 (138)	2000 (138)	1200 (82,7)	730 (50,3)	350 (24,1)	250 (17,2)
		250 (17,2)	2000 (138)	2000 (138)	1600 (110)	970 (66,9)	460 (31,7)	320 (22,1)

form with in this regulator. The formation of ice decreases the size of the port opening, so the regulator is unable to supply enough flow to satisfy the downstream demand. When the downstream pressure falls below the outlet pressure setting of the Type 627M or 627HM regulator, the disk assembly of the Type 627Mor 627HMregulator moves off its seat ring, permitting alcohol to flow into the main gas line. The alcohol carried to the main regulator by the flow stream prevents additional ice from forming on the seat ring. When normal flow resumes, and as pressure in the downstream system is restored, the Type 627M or 627HM regulator shuts off.

Startup and Adjustment

Startup

WARNING

To avoid personal injury or property damage due to explosion or damage to regulator or downstream components during startup, release downstream pressure to prevent an overpressure condition on the diaphragm of the regulator.

Table 4. Type 627R Internal Relief Performance[1] (continued)

OUTLET PRESSURE RANGE, SPRING PART NUMBER, AND COLOR	OUTLET PRESSURE SETTING, PSIG (bar)	MAXIMUM ALLOWABLE DOWNSTREAM SYSTEM PRESSURE, PSIG (bar)	MAXIMUM INLET PRESSURE TO KEEP MAXIMUM ALLOWABLE DOWNSTREAM SYSTEM PRESSURE FROM BEING EXCEEDED, PSIG (bar)[2]					
			Orifice Size, Inches (mm)					
			3/32 (2,4)	1/8 (3,2)	3/16 (4,8)	1/4 (6,4)	3/8 (9,5)	1/2 (12,7)
35 to 80 psig (2,4 to 5,5 bar) 10B3078X012 Blue	40 (2,8)	125 (8,6)	2000 (138)	1100 (75,8)	500 (34,5)	300 (20,7)	170 (11,7)	140 (9,66)
		150 (10,3)	2000 (138)	1600 (110)	750 (51,7)	440 (30,3)	230 (15,9)	180 (12,4)
		175 (12,1)	2000 (138)	2000 (138)	980 (67,6)	580 (40,0)	290 (20,0)	220 (15,2)
		200 (13,8)	2000 (138)	2000 (138)	1200 (82,7)	720 (49,6)	340 (23,4)	250 (17,2)
		250 (17,2)	2000 (138)	2000 (138)	1600 (110)	940 (64,8)	450 (31,0)	320 (22,1)
	50 (3,4)	125 (8,6)	1400 (96,5)	820 (56,5)	400 (27,6)	230 (15,9)	150 (10,3)	140 (9,66)
		150 (10,3)	2000 (138)	1400 (96,5)	650 (44,8)	370 (25,5)	210 (14,5)	170 (11,7)
		175 (12,1)	2000 (138)	1900 (131)	700 (48,3)	530 (36,5)	270 (18,6)	210 (14,5)
		200 (13,8)	2000 (138)	2000 (138)	1100 (75,8)	670 (46,2)	330 (22,8)	240 (16,5)
		250 (17,2)	2000 (138)	2000 (138)	1500 (103)	920 (63,4)	430 (29,6)	320 (22,1)
	60 (4,1)	125 (8,6)	900 (62,1)	450 (31,1)	270 (18,6)	190 (13,1)	140 (9,66)	130 (8,97)
		150 (10,3)	1700 (117)	1100 (75,8)	540 (37,2)	300 (20,7)	190 (13,1)	160 (11,0)
		175 (12,1)	2000 (138)	1700 (117)	780 (53,8)	470 (32,4)	250 (17,2)	200 (13,8)
		200 (13,8)	2000 (138)	2000 (138)	1000 (69,0)	610 (42,1)	310 (21,4)	230 (15,9)
		250 (17,2)	2000 (138)	2000 (138)	1400 (96,5)	880 (60,7)	420 (29,0)	310 (21,4)
	70 (4,8)	150 (10,3)	1200 (82,7)	850 (58,6)	430 (29,6)	250 (17,2)	170 (11,7)	160 (11,0)
		175 (12,1)	2000 (138)	1400 (96,5)	670 (46,2)	400 (27,6)	230 (15,9)	190 (13,1)
		200 (13,8)	2000 (138)	2000 (138)	920 (63,4)	550 (37,9)	280 (19,3)	230 (15,9)
		250 (17,2)	2000 (138)	2000 (138)	1300 (89,6)	830 (57,2)	400 (27,6)	310 (21,4)
	80 (5,5)	150 (10,3)	800 (55,2)	500 (34,5)	300 (20,7)	200 (13,8)	160 (11,0)	150 (10,3)
		175 (12,1)	1500 (103)	1200 (82,7)	550 (37,9)	330 (22,8)	210 (14,5)	190 (13,1)
		200 (13,8)	2000 (138)	1700 (117)	800 (55,2)	480 (33,1)	270 (18,6)	220 (15,2)
		250 (17,2)	2000 (138)	2000 (138)	1200 (82,7)	770 (53,1)	390 (26,9)	300 (20,7)
70 to 150 psig (4,8 to 10,3 bar) 10B3079X012 Red	70 (4,8)	175 (12,1)	1900 (131)	600 (41,4)	400 (27,6)	260 (17,9)	200 (13,8)	175 (12,1)
		200 (13,8)	2000 (138)	1200 (82,7)	630 (43,4)	380 (26,2)	250 (17,2)	210 (14,5)
		250 (17,2)	2000 (138)	2000 (138)	1100 (75,8)	680 (46,9)	360 (24,8)	290 (20,0)
	80 (5,5)	175 (12,1)	1400 (96,5)	250 (17,2)	240 (16,5)	200 (13,8)	190 (13,1)	175 (12,1)
		200 (13,8)	2000 (138)	960 (66,2)	520 (35,9)	330 (22,8)	240 (16,5)	210 (14,5)
		250 (17,2)	2000 (138)	2000 (138)	1000 (69,0)	620 (42,7)	350 (24,1)	280 (19,3)
	100 (6,9)	200 (13,8)	1500 (103)	250 (17,2)	240 (16,5)	230 (15,9)	210 (14,5)	210 (14,5)
		250 (17,2)	2000 (138)	1600 (110)	770 (53,1)	520 (35,9)	320 (22,1)	270 (18,6)
	125 (8,6)	250 (17,2)	2000 (138)	1000 (69,0)	500 (34,5)	390 (26,9)	290 (20,0)	260 (17,9)
	150 (10,3)	250 (17,2)	1200 (82,7)	260 (17,9)	260 (17,9)	260 (17,9)	260 (17,9)	260 (17,9)

1. The internal relief performance values are obtained by removing the disk assembly.
2. For inlet pressures in excess of 1000 psig (69 bar), refer to the maximum body and disk pressure ratings in the specifications table.
3. For pressure settings under 10 psig (0,69 bar), inlet pressure should be limited to approximately 100 psig (6,9 bar) so the setpoint adjustment can be obtained.

▭ - Shaded areas indicate maximum inlet pressures allowed during system malfunction only. Table 6 gives the maximum inlet pressure for normal regulator operation.

In order to avoid an overpressure condition and possible equipment damage, pressure gauges should always be used to monitor pressures during startup.

1. Slowly open the upstream shutoff valve.
2. Slowly open the downstream shutoff valve.
3. Check all connections for leaks.
4. Make final control spring adjustments according to the adjustment procedures.

Adjustment

The range of allowable pressure settings is marked on the nameplate (figure 2). If a pressure setting beyond this range is necessary, substitute the appropriate regulator control spring. Change the nameplate to indicate the new pressure range.

Before increasing the setting, refer to tables 2, 3, or 4. Review the pressure limits for the control spring range being used and be certain that the new pressure setting will not result in an overpressure condition.

Table 5. Maximum Torque Values

KEY NUMBER(1)	DESCRIPTION	MAXIMUM TORQUE, FOOT-POUNDS (N•m)
2	Seat ring	25 (34)
3	Cap screw (w/ aluminum diaphragm casing)	16 (22)
	Cap screw (w/ ductile iron or steel diaphragm casing)	25 (34)
18	Lever cap screw	7 (9)
22	Diaphragm connector nut	17 (23)
26	Guide retainer (for Type 627R and 627MR only)	3 (4)
37	Spring case cap screw (w/ aluminum or ductile iron diaphragm casing)	7 (9)
	Spring case cap screw (w/ steel diaphragm casing)	35 (47)
46	Diaphragm cap screw (w/Type 627 or 627M)	7 (9)
	Diaphragm cap screw (w/Type 627H or 627MH)	14 (19)

1. Refer to figures 7 through 10 for key number locations.

Note

Always use a pressure gauge to monitor pressure when making adjustments.

Refer to figures 7 through 12 for key number locations.

1. Remove the adjusting screw cap (key 36).
2. Loosen the locknut (key 34).
3. Increase the outlet pressure setting by turning the adjusting screw (key 35) clockwise. Decrease the outlet pressure setting by turning the adjusting screw counter-clockwise.
4. When the desired pressure is obtained, hold the adjusting screw (key 35) in place and tighten the locknut (key 34).

Shutdown

WARNING

To avoid personal injury or property damage due to explosion or damage to regulator or downstream components during shutdown, release downstream pressure to prevent an overpressure condition on the diaphragm of the regulator.

1. Close the nearest upstream shutoff valve.
2. Close the nearest downstream shutoff valve.
3. Open the vent valve between the regulator and the downstream shutoff valve nearest to it.
4. For a Type 627, 627H, or 627R regulator, the regulator will open to release pressure between the upstream shutoff valve and the regulator.
5. A Type 627M, 627HM, or 627MR regulator requires venting the control line and downstream pressure from the regulator before maintenance. The pressure between these shutoff valves is released through the open regulator because the disk assembly remains open in response to the decrease in control line pressure.

Maintenance

Unless otherwise specified, the following maintenance procedures apply to all types of regulators. For a summary of maximum torque values required for all types of regulators, refer to table 5.

Due to normal wear, damage from external sources, or debris in the air or gas line, regulator parts such as the disk assembly, seat ring, and diaphragm must be inspected periodically and replaced as necessary to ensure correct performance. The frequency of inspection and replacement depends upon the severity of conditions and the requirements of state and federal laws. Normal wear of the seat ring and disk assembly is accelerated with high pressure drops and with large amounts of impurities in the flow stream. Instructions are given below for replacing the disk assembly, seat ring, diaphragm, and O-rings. These procedures may also be used for disassembly required for inspection and replacement of other parts.

Problem Indication for Type 627R and 627MR Regulators

WARNING

Isolate the regulator from all pressure to avoid personal injury and equipment damage due to explosion or sudden release of process pressure. Cautiously release pressure from the regulator before attempting disassembly.

The vent assembly is equipped with a relief indicator (key 49, figure 4). The cap for the relief indicator snaps over the vent assembly opening. If the relief valve opens wide, exhaust gas pops the cap off the screen vent assembly opening indicating a problem with the regulator. If the cap pops off, refer to the shutdown and to the body area maintenance procedures to inspect the disk assembly and seat ring.

If the disk assembly and seat ring are not damaged, refer to the diaphragm and spring case area maintenance procedures in this section.

The disk assembly and seat ring can be inspected, removed, and replaced without removing the regulator body from the line connections. Refer to the body area maintenance procedures.

Body Area Maintenance Procedures

These procedures are for gaining access to the disk assembly, seat ring, diaphragm casing O-ring and stem assembly. All pressure must be released from the diaphragm casing before the performing these steps.

While using the following procedures, refer to figures 7 through 12 for key number locations.

Replacing the Disk Assembly or Seat Ring

1. To inspect and replace the disk assembly (key 9) or seat ring (key 2), remove the cap screws (key 3, figure 5), and separate the diaphragm casing (key 5) from the body (key 1).

2. Inspect and, if necessary, remove the seat ring (key 2). If removed, coat the threads of the replacement seat ring with lubricant (key 38) and torque to 25 foot-pounds (34 N•m).

3. Inspect the disk assembly and, if necessary, remove the hair pin clip (key 13) that holds the disk assembly (key 9) in place. If replacing the disk assembly is the only maintenance required, skip to step 16.

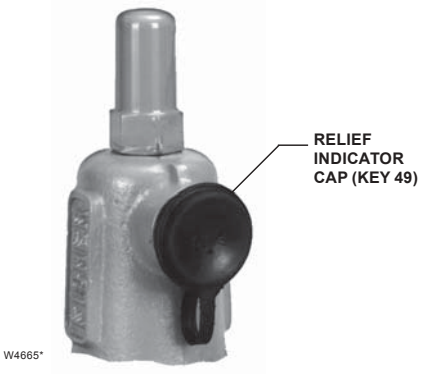

Figure 4. Relief Indicator

Replacing the Stem Assembly

If it is necessary to perform maintenance on the stem assembly, continue with steps 4 through 8 and 15 through 19 for Type 627, 627H, and 627R regulators, or steps 9 through 19 for Type 627M, 627HM, and 627MR regulators.

Perform steps 4 through 8 for Type 627, 627H, and 627R Regulators only:

4. ForType 627, 627H, and627R regulators (figure 5), use steps 5 through 8 to remove and replace the stem assembly.

5. Remove the boost body (key 6), stabilizer (key 7), and stem guide (key 8) from the diaphragm casing (key 5). Unhook and remove the stem (key 10) from the diaphragm casing (key 5).

6. Remove and inspect the diaphragm casing O-ring (key 4, figure 7, 8, or 11) and replace it if necessary.

7. Apply lubricant (key 42) to a replacement diaphragm casing O-ring (key 4, figure 7, 8, or 11) and install it onto the boost body (key 6). Skip to step 14.

8. For the Type 627 or 627H regulators, be sure to insert the pitot tube (tab) into the outlet side of the body (see figure 7 or 11). Skip to step 14.

Perform steps 9 through 19 for Type 627M, 627HM, and 627MR Regulators only:

9. For Type 627M, 627HM, and 627MR regulators (figure 5), use steps 10 through 14 to remove and replace the stem assembly.

10. To remove the blocked throat (key 43), insert a screw driver blade into the groove provided in the throat and pry it out of the diaphragm casing (key 5). Inspect and replace parts as necessary.

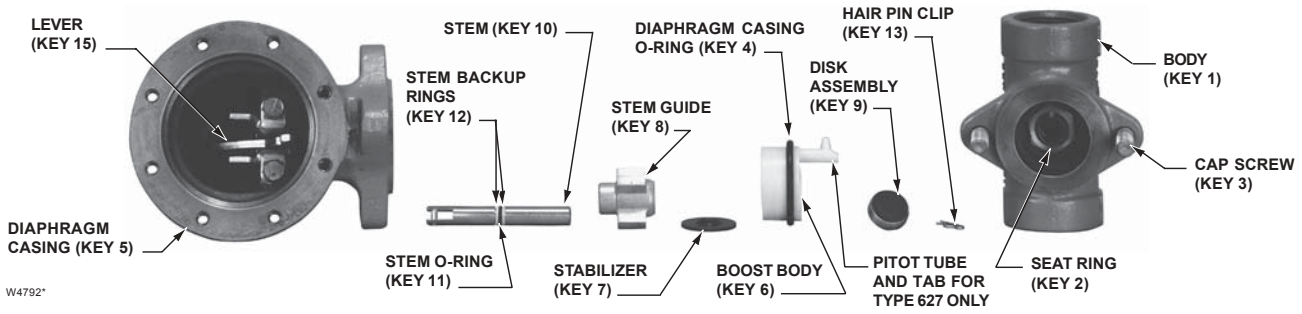

Type 627 and 627R

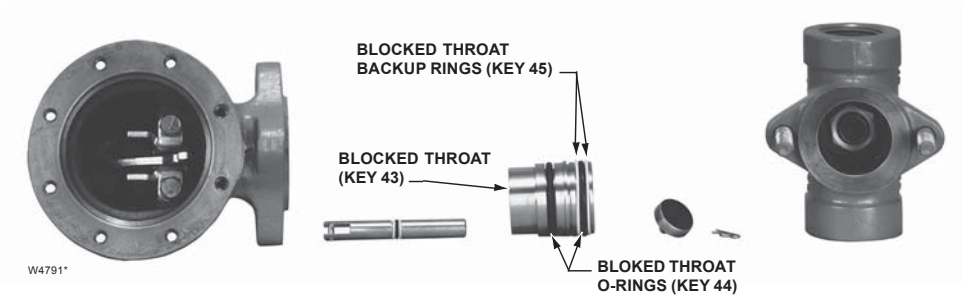

Type 627M amd 627MR

Figure 5. Stem Assemblies

11. Inspect and, if necessary, replace the blocked throat O-rings (key 44, figure 5) and backup rings (key 45, figure 5).

12. Apply lubricant (key 42) to replacement blocked throat O-rings (key 44) and backup rings (key 45).

13. Apply lubricant (key 42) to the replacement stem O-ring (key 11) and stem backup rings (key 12) and install them on the stem (key 10).

14. For assembly, insert the stem (key 10) into the diaphragm casing (key 5) and hook it on the lever (key 15).

15. Insert parts into the diaphragm casing (key 5) that were removed in steps 5 and 6 or step 10 (see figure 5).

16. Install the the disk assembly (key 9), line up the hole in the disk assembly and stem (key 10) and insert the hair pin clip (key 13).

17. Position the diaphragm casing plus attached parts in relation to the body (key 1) so that they are correct for the application.

18. Secure the diaphragm casing to the body with the cap screws (key 3, figure 5). For an aluminum diaphragm casing (key 5), torque the cap screws (key 3) to 16 foot-pounds (22 N•m). For ductile iron or steel diaphragm casings, torque the cap screws (key 3) to 25 foot-pounds (34 N•m).

19. It may be necessary to reposition the diaphragm spring case to prevent rain, ice, and foreign debris from entering the spring case. Refer to the diaphragm and spring case area maintenance procedures, steps 1, 2, and 21 through 25.

Diaphragm and Spring Case Area Maintenance Procedures

These procedures are for gaining access to the control spring, diaphragm assembly, and lever assembly. All spring pressure must be released from the diaphragm casing before these steps can be performed.

While using the following procedures, refer to figures 7 through 12 for key number locations.

1. Remove the adjusting screw cap (key 36), loosen the lock nut, and turn the adjusting screw (key 35) counterclockwise until all compression is removed from the control spring (key 32).

2. Remove the spring case cap screws (key 37), the nameplates, and lift off the spring case (key 29). If changing the control spring (key 32) or repositioning the spring case (key 29) is the only maintenance required, install the replacement control spring or rotate the spring case so it is correct for the application. Skip to step 21. For diaphragm area maintenance, continue with step 3.

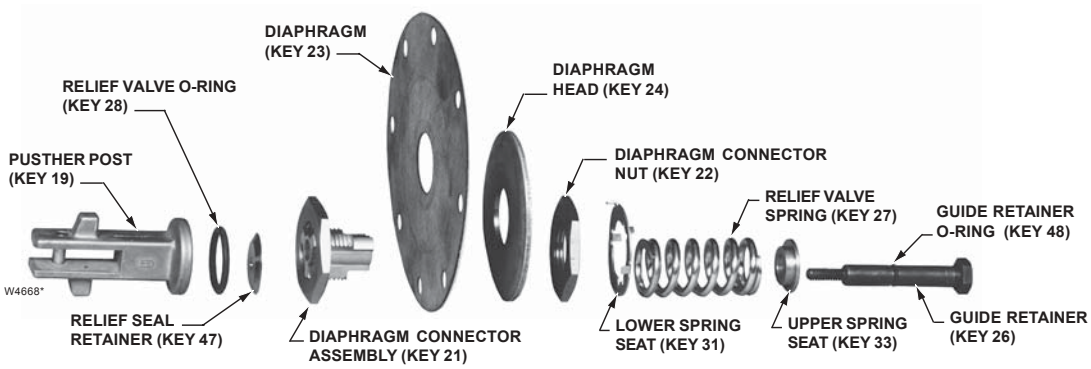

Type 627, 627R, 627M, or 627MR

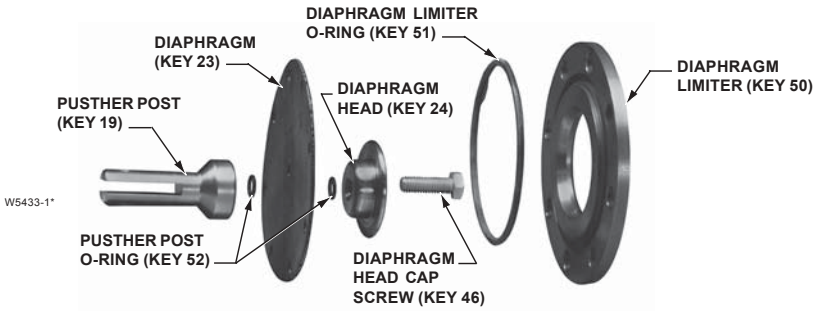

Type 627H amd 627HM

Figure 6. Diaphragm Assemblies

3. Remove the diaphragm limiter and O-ring (keys 50 and 51, on the Type 627H or 627HM only). Remove the diaphragm assembly by tilting it so that the pusher post (key 19) slips off the lever (key 15).

4. If it is necessary to replace the lever assembly, remove the lever cap screws (key 18).

5. Install the replacement lever (key 15) into the lever retainer (key 16) by inserting the lever pin (key 17). Secure the lever assembly into the diaphragm casing with the cap screws (key 18) and torque the cap screws to 7 foot-pounds (9 N•m).

If it is necessary to perform maintenance on the diaphragm assembly, continue with steps 6 through 11 and step 20 for Type 627, 627H, 627M, and 627HM regulators, or steps 12 through 19 for Type 627R and 627MR regulators.

Perform steps 6 through 11 for Type 627, 627H, 627M, and 627HM Regulators only:

6. For Type 627, 627H, 627M, and 627HM regulators (figures 5 & 6), use steps 7 through 11 to disassemble and reassemble the diaphragm assembly.

7. Remove the diaphragm head cap screw (key 46), lower spring seat (key 31,Type 627 or 627Monly), and diaphragm head (key 24). On the Type 627H or 627HM, remove the diaphragm cap screw O-rings (key 52). Separate the diaphragm (key 23) from the pusher post (key 19).

8. Install the diaphragm (key 23), in reverse order in step 7, on the pusher post (key 19), insert and finger tighten the diaphragm head cap screw (key 46).

9. Hook the pusher post on the lever (key 15), then turn the diaphragm (key 23) to match the holes in the diaphragm with the holes in the spring casing.

10. Unhook the pusher post from the lever and torque the diaphragm head cap screw (key 46) to 7 foot-pounds (9 N•m) for the Type 627 or 627M. On the Type 627H or 627HM torque the diaphragm head cap screw to 14 foot-pounds (18 N•m).

11. Hook the pusher post on the lever (key 15) and check the hole alignment. If necessary, loosen the cap screw (key 46) and reposition the diaphragm (key 23) on the pusher post (key 19). Retorque the screw (see step 10). Skip to step 20.

Perform steps 12 through 19 for Type 627R and 627MR Regulators only:

12. For Type 627R and 627MR regulators (figure 6), use steps 13 through 19 to disassemble and reassemble the diaphragm assembly:

13. Remove the guide retainer (key 26) and separate the diaphragm parts. Refer to figure 6 for the sequence of parts.

14. To remove the diaphragm (key 23), remove the diaphragm connector nut (key 22) and lift off the diaphragm head (key 24) and diaphragm (key 23) from the connector assembly (key 21). Do not attempt to disassemble the connector assembly (key 21).

15. Position the replacement diaphragm (key 23) on the connector assembly (key 21), install the diaphragm head (key 24) and connector nut (key 22), then torque to 17 foot-pounds (32 N•m).

16. If necessary, replace the guide retainer O-ring (key 48) and, set the guide retainer (key 26) aside, ready for assembly.

17. On the pusher post (key 19) install the relief seal O-ring (key 28) and lubricate (key 42). Also, install the relief seal retainer (key 47), diaphragm connector assembly (key 21, with attached parts) relief spring (key 27), upper relief spring seat (key 33), and guide retainer (key 26). Torque the guide retainer (key 26) to 3 foot-pounds (4 N•m).

18. Hook the pusher post (with attached parts) on the lever (key 15) to check the alignment of the holes in the diaphragm with the holes in the spring casing. If the holes do not line up, unhook the pusher post from the lever, hold the pusher post, and rotate the diaphragm to the correct position.

19. Install the lower spring seat (key 31) over the relief spring so it rests flat on the connector nut (key 22).

20. Insert the diaphragm assembly into the diaphragm casing (key 5) and hook the pusher post on the lever (key 15).

21. Install the control spring (key 32) and upper spring seat (key 33), and apply lubricant (key 38) to the upper spring seat (key 33).

22. Install the spring case (key 29) so that the screened vent assembly (key 30) is in the correct position for the application. Place the nameplates (key 39) over the screw holes, insert the spring case cap screws (key 37), and finger tighten.

23. Screw in the adjustment screw to put slack into the diaphragm (key 23).

24. Using a crisscross pattern, finish tightening the spring case cap screws (key 37) to 7 foot-pounds (9 N•m) of torque.

25. If necessary, refer to the installation and/or the startup and adjustment procedures.

26. Install the adjusting screw cap (key 34) after regulator adjustment.

Parts Ordering

When corresponding with your Fisher sales office or sales representative about this regulator, always reference the type number which is found on the nameplate (key 39, figures 7 through 12).

When ordering replacement parts, reference the key number of each needed part as found in the following parts list.

Parts List

Key	Description	Part Number
	Type 627 Parts Kit with aluminum/nitrile trim (includes keys 4, 9, 11, 12, and 23)	R627X000A12
	Type 627 Parts Kit with stainless steel/nitrile trim (includes keys 4, 9, 11, 12, and 23)	R627X000S12
	Type 627R Parts Kit with aluminum/nitrile trim (includes keys 4, 9, 11, 12, 23, 28, and 48)	R627RX00A12
	Type 627R Parts Kit with stainless steel/nitrile trim (includes keys 4, 9, 11, 12, 23, 28, and 48)	R627RX00S12
1	Body	
	Ductile iron	
	1000 psig (69 bar) max inlet pressure	
	3/4-inch NPT size	30B3046X012
	1-inch NPT size	30B3048X012
	2-inch NPT size	30B3096X012
	Steel	
	2000 psig (138 bar) max inlet pressure	
	3/4-inch NPT size	30B3050X012
	1-inch NPT size	30B3051X012
	2-inch NPT size	30B7452X012
	Steel, ANSI Class 600 RF flanged	
	1480 psig (102 bar) max inlet pressure	
	1-inch size	40B6754X012
	2-inch size	40B6756X012
2*	Seat ring	
	Aluminum	
	3/32-inch (2.4 mm) port diameter	0R044109022
	1/8-inch (3.2 mm) port diameter	1A936709012
	3/16-inch (4.8 mm) port diameter	00991209012
	1/4-inch (6.4 mm) port diameter	0B042009012
	3/8-inch (9.5 mm) port diameter	0B042209012
	1/2-inch (12.7 mm) port diameter	1A928809012
	303 Stainless steel	
	3/32-inch (2.4 mm) port diameter	0R044135032
	1/8-inch (3.2 mm) port diameter	1A936735032
	3/16-inch (4.8 mm) port diameter	00991235032
	1/4-inch (6.4 mm) port diameter	0B042035032
	3/8-inch (9.5 mm) port diameter	0B042235032
	1/2-inch (12.7 mm) port diameter	1A928835032

*Recommended spare part.

Key	Description	Part Number
2*	Seat ring (continued)	
	316 Stainless steel, NACE[1] construction only	
	3/32-inch (2.4 mm) port diameter	0R0441X0012
	1/8-inch (3.2 mm) port diameter	1A9367X0022
	3/16-inch (4.8 mm) port diameter	009912X0012
	1/4-inch (6.4 mm) port diameter	0B0420X0012
	3/8-inch (9.5 mm) port diameter	0B0422X0012
	1/2-inch (12.7 mm) port diameter	1A9288X0012
3	Cap Screw (not shown), (2 req'd)	
	Type 627 and 627R w/aluminum diaphragm case, pl steel	18A1087X012
	All Types w/ductile iron diaphragm case, pl steel	1C403824052
	or steel diaphragm case, pl steel	1C403024052
4*	Diaphragm Case O-Ring (Type 627, 627H, or 627R only), nitrile	17A2325X022
5	Diaphragm Case	
	For Type 627 or 627R	
	Aluminum w/o 1/8-inch gauge tap	40B3084X012
	Aluminum with 1/8-inch gauge tap for Type 627 only	11B5380X012
	Ductile iron w/o 1/8-inch gauge tap	30B3053X012
	Ductile iron with 1/8-inch gauge tap for Type 627 only	31B0641X012
	Steel	30B3104X012
	For Type 627M or 627MR	
	Ductile iron	39A5987X012
	Steel	30B8734X012
	For Type 627H, steel	30B3104X012
	For Type 627HM, steel	30B8734X012
6	Boost Body (not for Type 627M, 627HM, or 627MR), Delrin[2]	
	For Type 627 or 627H	30B3056X012
	For Type 627R	30B3057X012
7	Stabilizer (for Type 627, 627H, and 627R only), nitrile	10B3060X012
8	Stem Guide (for Type 627, 627H, and 627R only), powdered metal	20B3061X012
9*	Disk Assembly (for all port diameters)	
	Aluminum holder and nitrile disk	1C4248X0212
	303 Stainless steel holder and nitrile disk	1C4248X0202
	Aluminum holder and nylon disk	1C4248X00A2
	303 Stainless steel holder and nylon disk	1C4248X0062
	NACE construction only	
	Aluminum holder and nitrile disk	1C4248X0212
	316 Stainless steel holder and nitrile disk	1C4248X0252
	Aluminum holder and nylon disk	1C4248X00A2
	316 Stainless steel holder and nylon disk	1C4248X0262
10	Stem	
	303 stainless steel	10B3059X012
	316 stainless steel (NACE)	10B3059X022
11*	Stem O-Ring, nitrile	1D687506992
12	Stem Backup Ring, TFE (2 required)	1K786806992
13	Hair Pin Clip, stainless steel	10B3058X012
14	Drive Pin, plated steel	1A953228982
15	Lever, plated steel	20B3063X012
16	Lever Retainer, plated steel	30B3097X012
17	Lever Pin	
	Stainless steel	10B3083X012
	316 stainless steel (NACE)	10B3083X022
18	Lever Cap Screw (2 required)	
	Plated steel	10B7454X012
	316 stainless steel (NACE)	10B7454X022
19	Pusher Post, aluminum	
	For Type 627 or 627M	10B3098 X012
	For Type 627R or 627MR	10B3098 X022
	For Type 627H or 627HM, 416 stainless steel	10B3098 X032
21	Diaphragm Connector (for Type 627R or 627MR only), stainless steel	10B6758X012
22	Diaphragm Connector Nut (for Type 627R or 627MR only), stainless steel	10B7449X012
23*	Diaphragm, nitrile	
	For Type 627 or 627M w/aluminum or ductile iron diaphragm case	10B3069X012
23*	Diaphragm, nitrile (continued)	
	For Type 627 or 627M w/steel diaphragm case	10B8735X012
	For Type 627R or 627MR w/aluminum or ductile iron diaphragm case	10B3068X012
	For Type 627R or 627MR w/steel diaphragm case	10B8736X012
	For Type 627H or 627HM w/steel diaphragm case (diaphragm is neoprene with nylon fabric)	12B0178X012
24	Diaphragm Head, plated steel	
	For Type 627 or 627M, plated steel	1D666428982
	For Type 627R or 627MR, plated steel	10B3071X012
	For Type 627H or 627HM, 416 stainless steel	12B0175X012
25	Relief Spring Seat (for Type 627R or 627MR only), steel	10B7446X012
26	Guide Retainer (for Type 627R or 627MR only), stainless steel	10B7450X012
27	Relief Spring (for Type 627R or 627MR only), plated steel	10B6757X012
28*	Relief Seal O-Ring (for Type 627R or 627MR only), nitrile	1J108506992
29	Spring Case	
	For Type 627 or 627R	
	Aluminum	40B3086X012
	Ductile iron	30B3055X012
	Steel	30B3102X012
	For Type 627M or 627MR	
	Ductile iron	30B3055X012
	Steel	30B3102X012
	For Type 627H or 627HM	
	Steel	30B3102X012
30	Screened Vent Assembly, plastic	10B3093X012
31	Lower Spring Seat, plated steel	
	For Type 627 or 627M	1D666625072
	For Type 627R or 627MR	20B3073X012
32	Control Spring, pl steel	
	5 to 20 psig (0.34 to 1.4 bar), yellow	10B3076X012
	15 to 40 psig (1.0 to 2.8 bar), green	10B3077X012
	35 to 80 psig (2.4 to 5.5 bar), blue	10B3078X012
	70 to 150 psig (4.8 to 10.3 bar), red	10B3079X012
	140 to 250 psig range (9.6 to 17.2 bar), blue, used in a Type 627H or 627HM	10B3078X012
	240 to 500 psig range (16.5 to 34.5 bar), red, used in a Type 627H or 627HM	10B3079X012
33	Upper Spring Seat, plated steel	1D667125072
34	Locknut, plated steel	1D667728982
35	Adjusting Screw, pl steel	
	For Type 627 or 627M	10B3081X012
	For Type 627H or 627HM	10B3081X012
	For Type 627R or 627MR	10B3080X012
36	Adjusting Screw Cap, plastic	20B3082X012
37	Spring Case Cap Screw, pl steel (8 required)	
	For aluminum or ductile iron diaphragm case	1A391724052
	For steel diaphragm case	10B8737X012
	For Type 627H/HM, steel diaphragm case	1A346424052
39	Nameplate	----------
43	Blocked Throat (for Type 627M, 627HM or 627MR only), stainless steel	10B3085X012
44	Blocked Throat O-Ring (for Type 627M, 627HM, or 627MR only), nitrile (2 required)	1E264306992
45	Blocked Throat Backup Ring (for Type 627M, 627HM, or 627MR only), TFE (2 required)	10B3106X012
46	Diaphragm Head Cap Screw, steel	
	For Type 627 or 627M	1K920724052
	For Type 627H or 627HM	1C379124052
47	Relief Seal Retainer (for Type 627R or 627MR only), stainless steel	10B7445X012
48*	Guide Retainer O-Ring (for Type 627R or 627MR only), nitrile	1D682506992
49	Relief Indicator (for Type 627R or 627MR only), rubber (not shown)	30B3100X012
50	Diaphragm Limiter	22B0176X012
51*	Diaphragm Limiter O-Ring	1K877606992
52*	Pusher Post O-Ring (2 required)	1C853806992

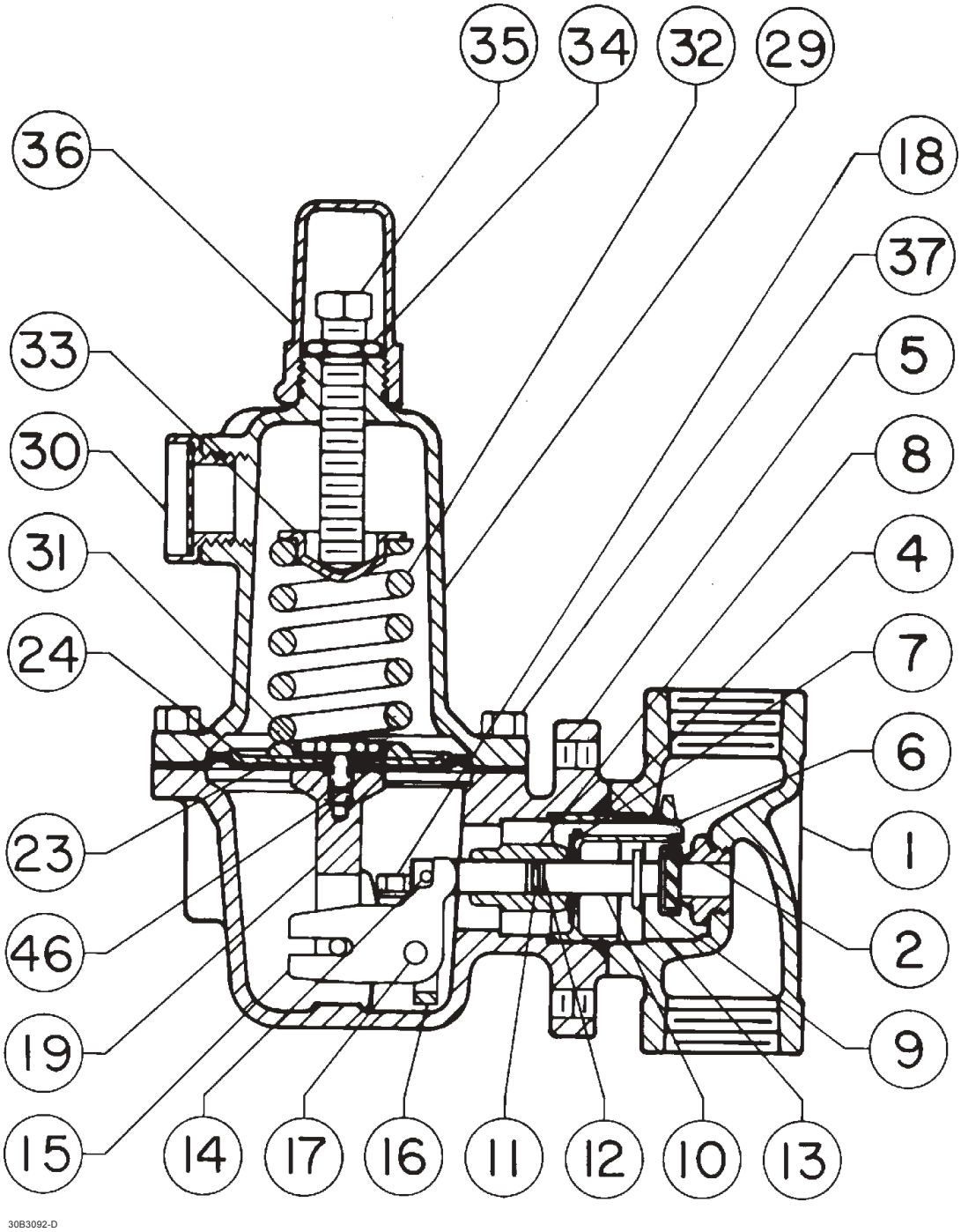

Figure 7. Type 627 Regulator Components

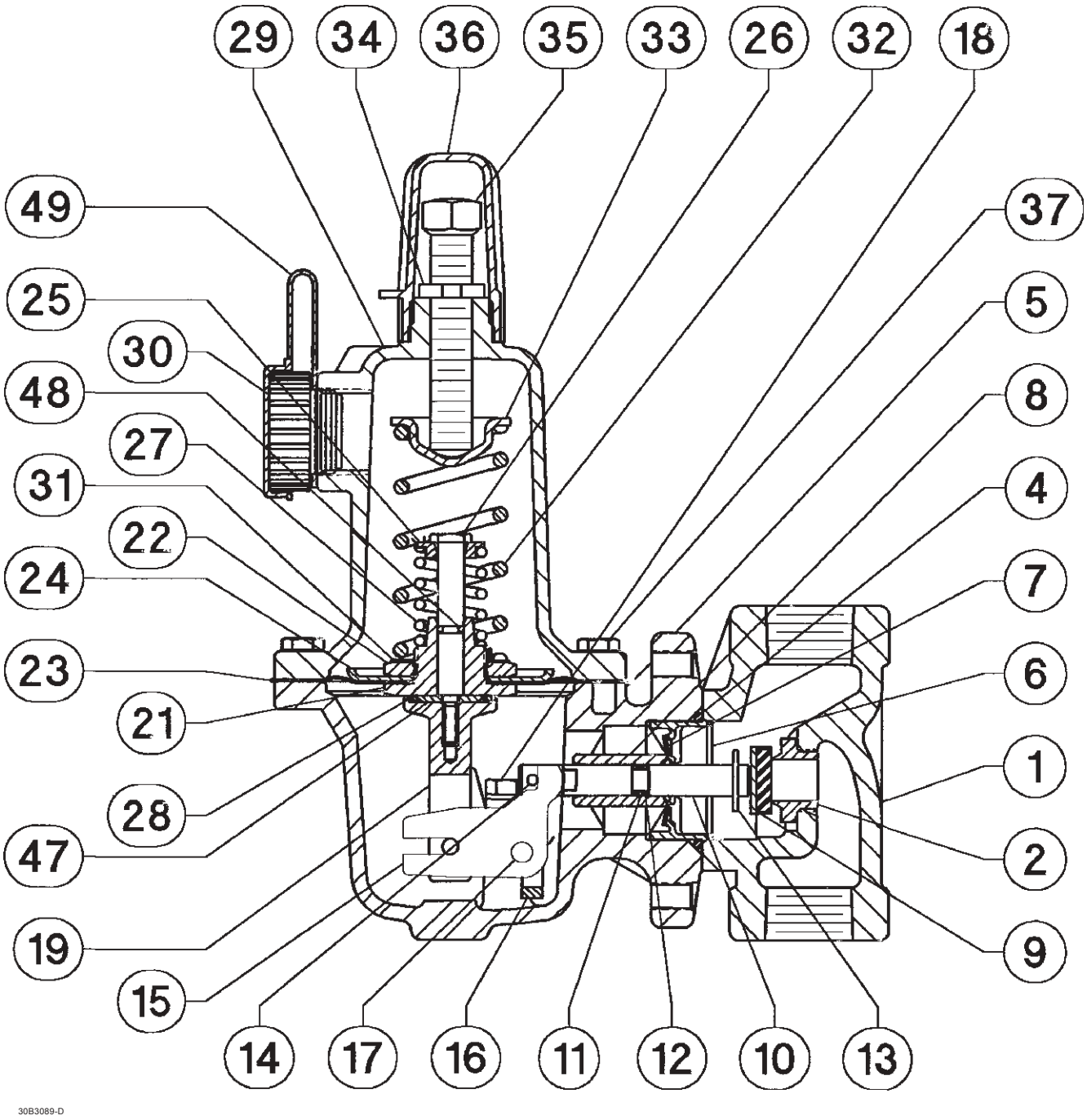

Figure 8. Type 627R Regulator Components

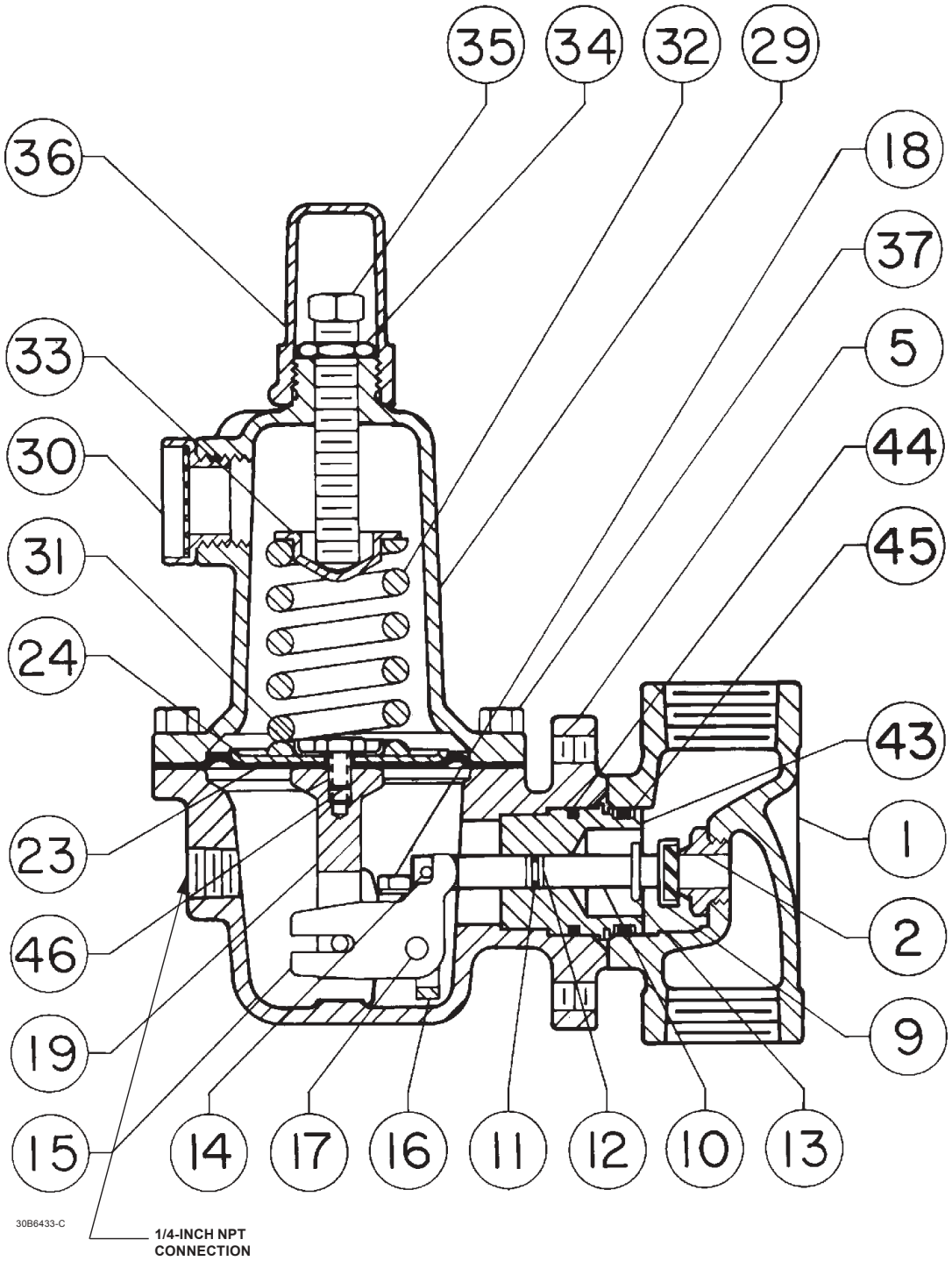

Figure 9. Type 627M Regulator Components

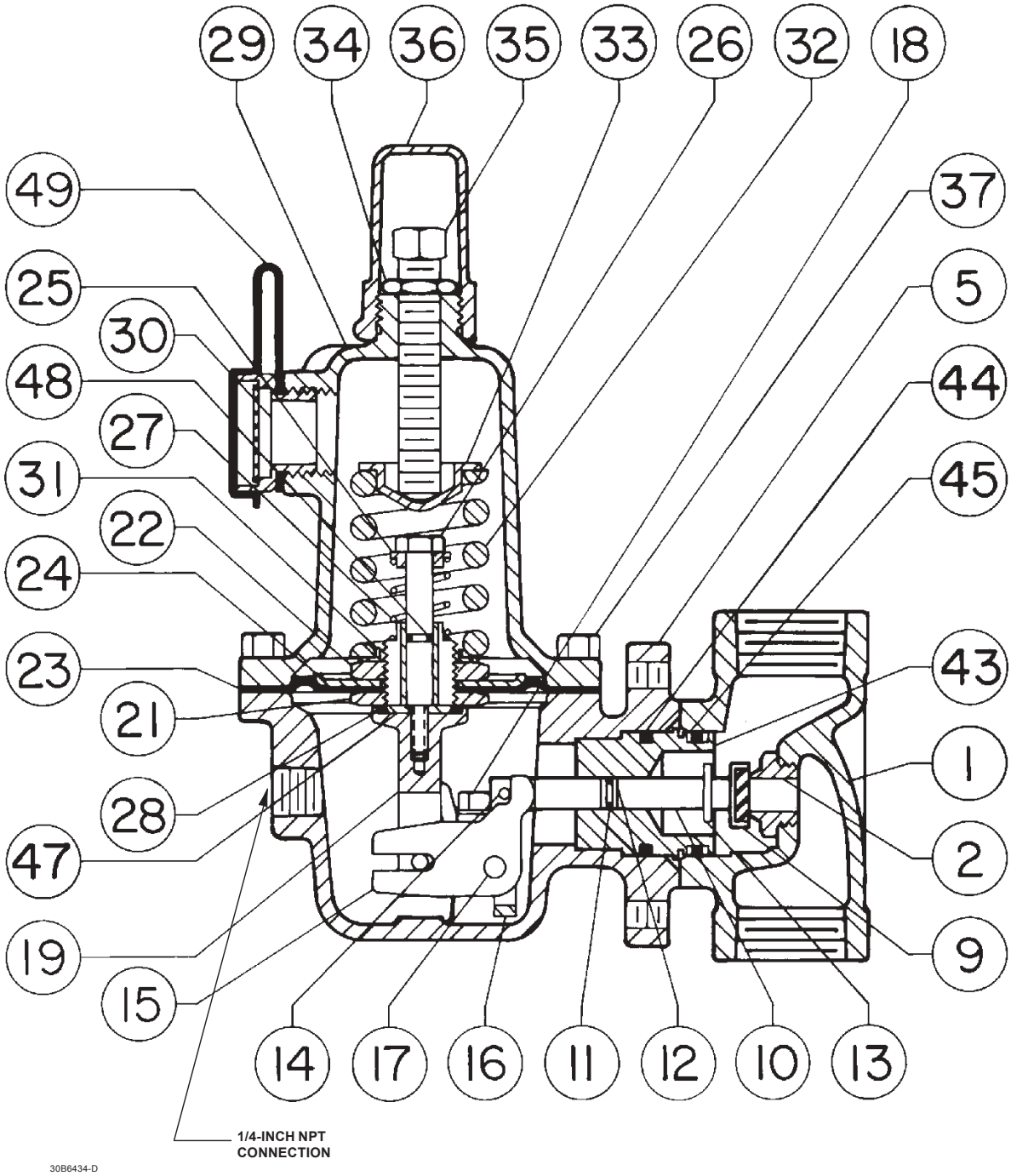

Figure 10. Type 627MR Regulator Components

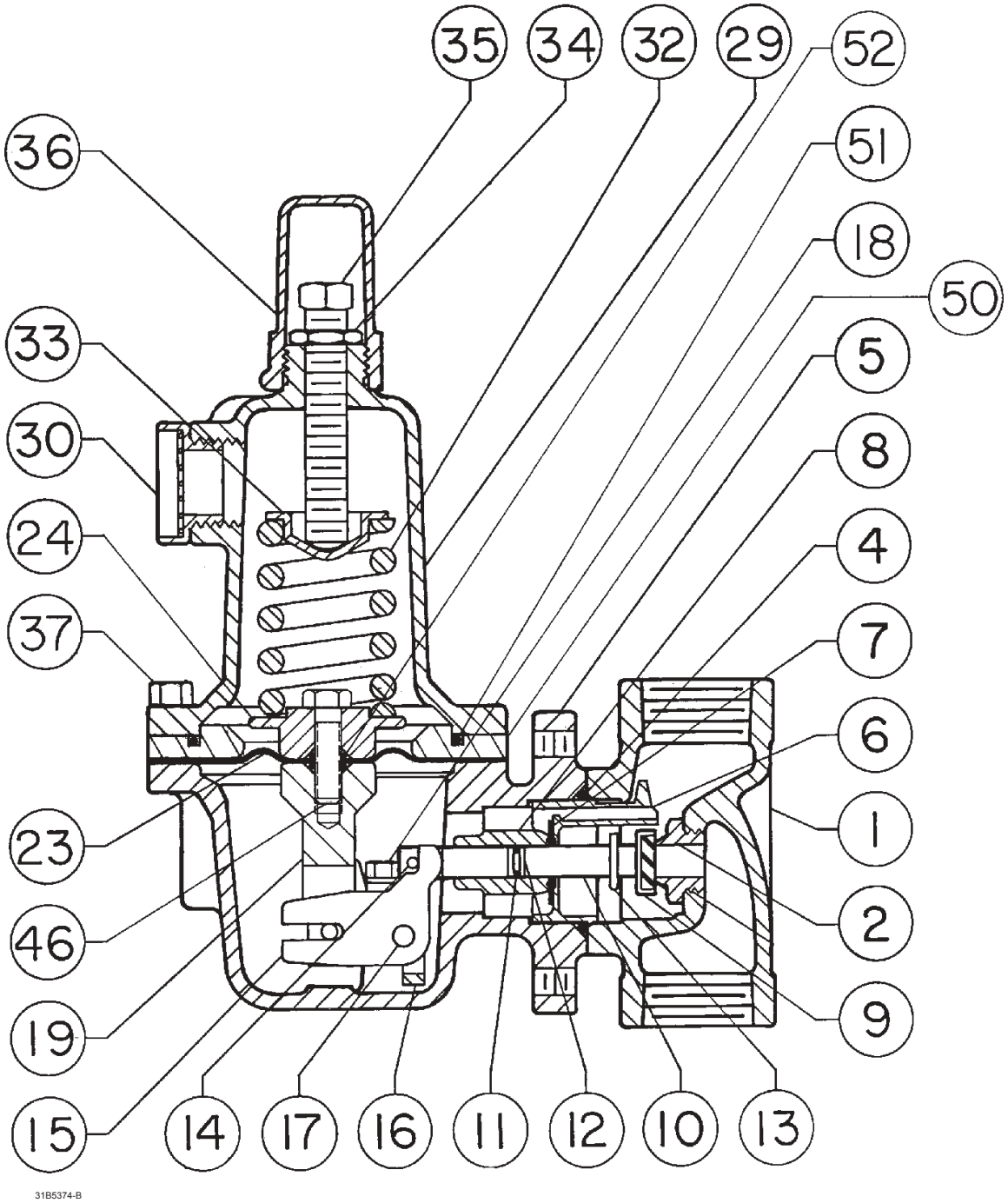

Figure 11. Type 627H Regulator Components

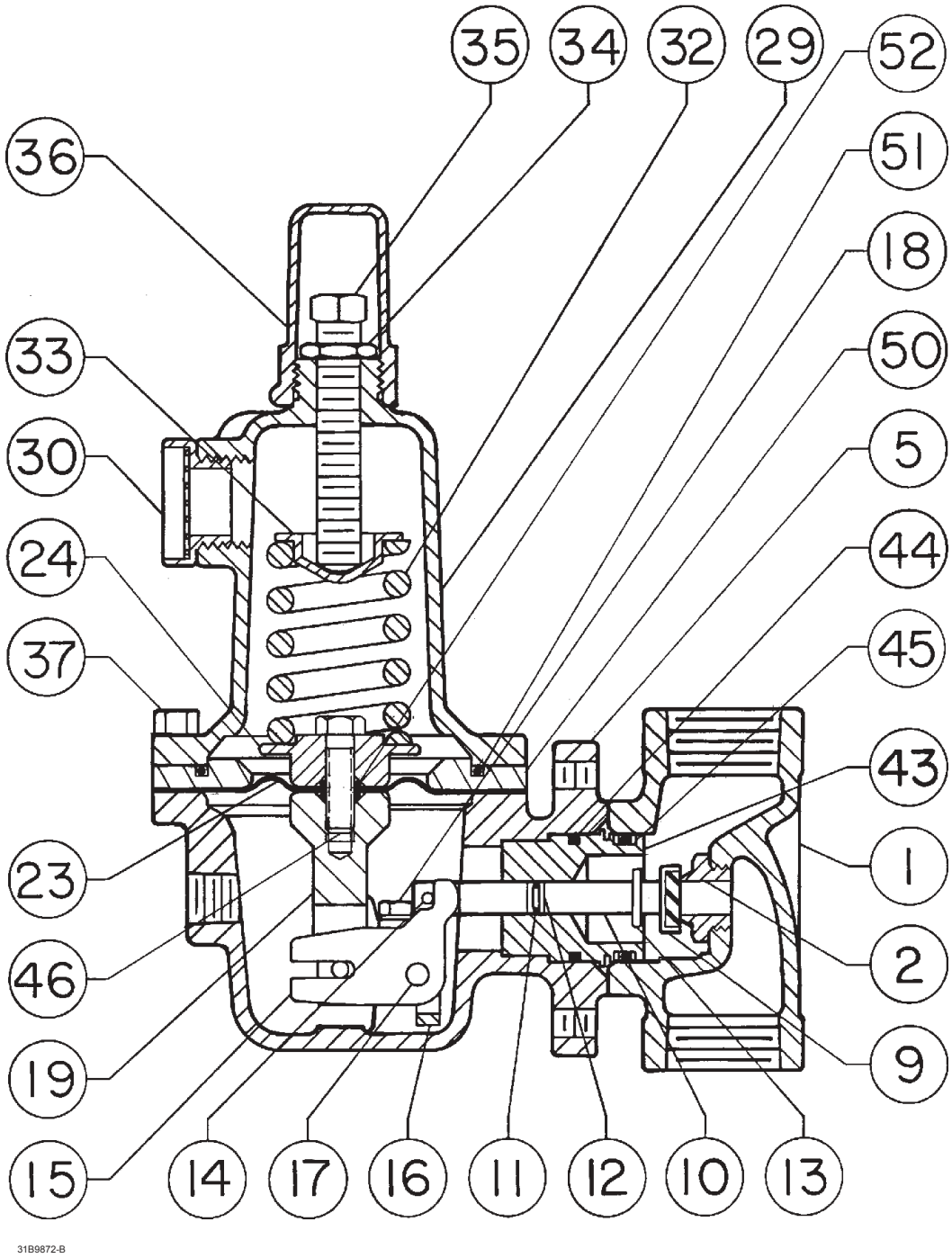

Figure 12. Type 627HM Regulator Components

January 2001

Errata Sheet
for

627 Series
Form 5252, July 1989

This errata sheet includes information covering the Type 627LB extended body regulator. This new body style is available on all 627 Series configurations and will be an addition to key 1 in the Parts List. The pressure ratings on the Type 627LB bodies will be identical to the existing specifications stated in the current 627 Series Instruction Manual. Each bullet on this errata sheet refers to a section of the 627 Series Instruction Manual (form 5252) where this information needs to be added.

- **Add the following to the Available Constructions section of Table 1. Specifications on page 2.**

Type 627LB: A 627 Series construction with an extended NPT screwed body. Note: The pressure ratings and capacities for a Type 627LB depend on the 627 Series construction. See the above listed constructions for ratings and specifications.

- **Add the following to the Parts List on page 12.**

Key	Description	Part Number
1	Body	
	Type 627LB - Ductile iron	
	1000 psig (69 bar) max inlet pressure	
	3/4-inch NPT screwed body	39B2450X012
	1-inch NPT screwed body	39B2451X012
	2-inch NPT screwed body	39B0414X012
	Type 627LB - Steel	
	2000 psig (138 bar) max inlet pressure	
	3/4-inch NPT screwed body	39B0411X012
	1-inch NPT screwed body	39B0412X012
	2-inch NPT screwed body	39B0415X012

- **Add the following figure to the end of page 18.**

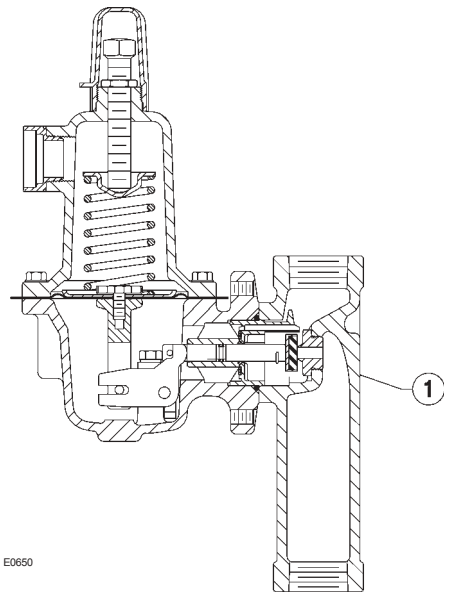

Figure 13. Type 627LB Regulator Body

Fisher is a mark owned by Fisher Controls International, Inc., a business of Emerson Process Management. The Emerson logo is a trademark and service mark of Emerson Electric Co. All other marks are the property of their respective owners.

The contents of this publication are presented for informational purposes only, and while every effort has been made to ensure their accuracy, they are not to be construed as warranties or guarantees, express or implied, regarding the products or services described herein or their use or applicability. We reserve the right to modify or improve the designs or specifications of such products at any time without notice.

Fisher does not assume responsibility for the selection, use or maintenance of any product. Responsibility for proper selection, use and maintenance of any Fisher product remains solely with the purchaser.

For information, contact Fisher:
Marshalltown, Iowa 50158 USA
McKinney, Texas 75070 USA
28320 Gallardon, France
40013 Castel Maggiore (BO), Italy
Sao Paulo 05424 Brazil
Singapore 128461

©Fisher Controls International, Inc., 1986, 1989; All Rights Reserved